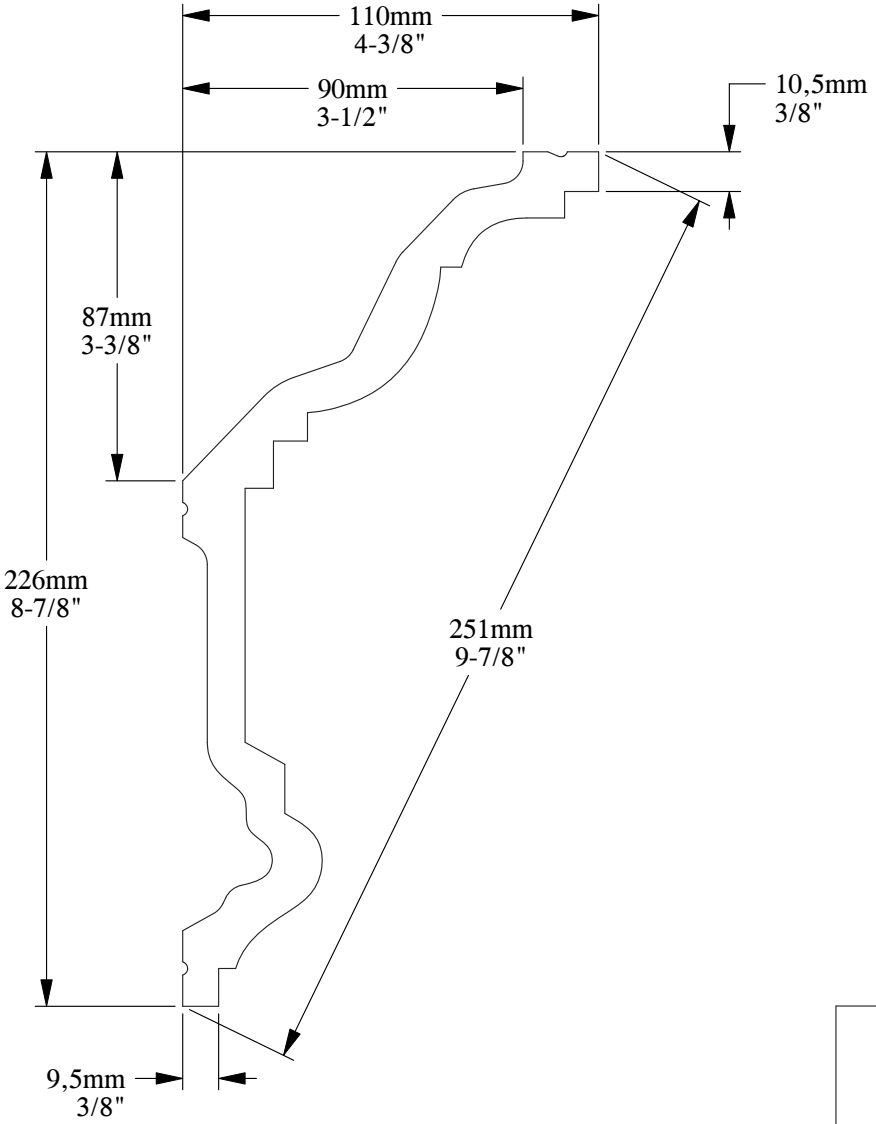

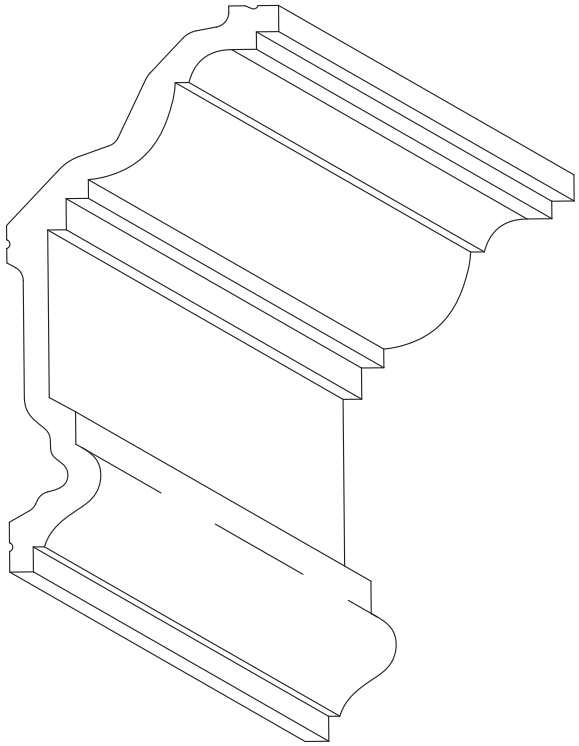

ORAC®
DECOR

Biekorfstraat 32
8400 Oostende - Belgium
Tel +32 (0)59 80 32 52
www.oracdecor.com
info@oracdecor.com

Part name: C332

Designed by: ORAC

Designed on: 01-Jan-1985

Version: 1.0

Unless otherwise specified: all dimensions are in millimeters and inches, scale 1:1, length 2 meters

All information in this document is Orac's exclusive property. It may in no case be reproduced, even partly, be communicated to a third party or used for any possible purpose without ORAC's express written permission. Further legal information can be found at https://www.oracdecor.com/en/general-sales-conditions